SPECIFICATION

NEXLEDS®
NEXLEDS LTD



LED Strip Light

NX-05COB504-6W

Specification

PRODUCT NAME :	LED Strip Light		
MODEL NO. :	NX-05COB504-6W-xK-IPxx		
SPECIFICATION :	DC24V, 6W/M		
WORKING TEMP :	-20-50(℃)		
CRI(RA) :	>80		
COLOR :	White Color		
LIGHT SOURCE :	Sanan COB Chip		
LIFE TIME :	50000 hrs		
BEAM ANGLE :	120°		
PRODUCT SIZE :	5000*5mm		
CUTTING LENGTH :	13.89 mm		
IP :	IP20	IP 65	
APPLICATION :	Residential lighting, decorative lighting; Home, Shop, Hotel.		
WARRANTY :	2 years		
STANDARD :	UL		
CCT & LUMEN:	3000K	4000K	5000K
	(540 LM/M)	(570 LM/M)	(570 LM/M)

* The above measurements of watts, brightness and efficiency allowance tolerance ±10%.
* The above measurements are based on IP20.

Feature:

1. Chip-on-board design, with more chips on PCB, the lighting effects are more evenly.
2. 5mm ultra slim PCB, cut length is only 13.89mm, better for more applications in furniture lighting or display lighting.
3. Double layer 2oz PCB, for better flexibility, heat dissipation and voltage drop.

Dimension:

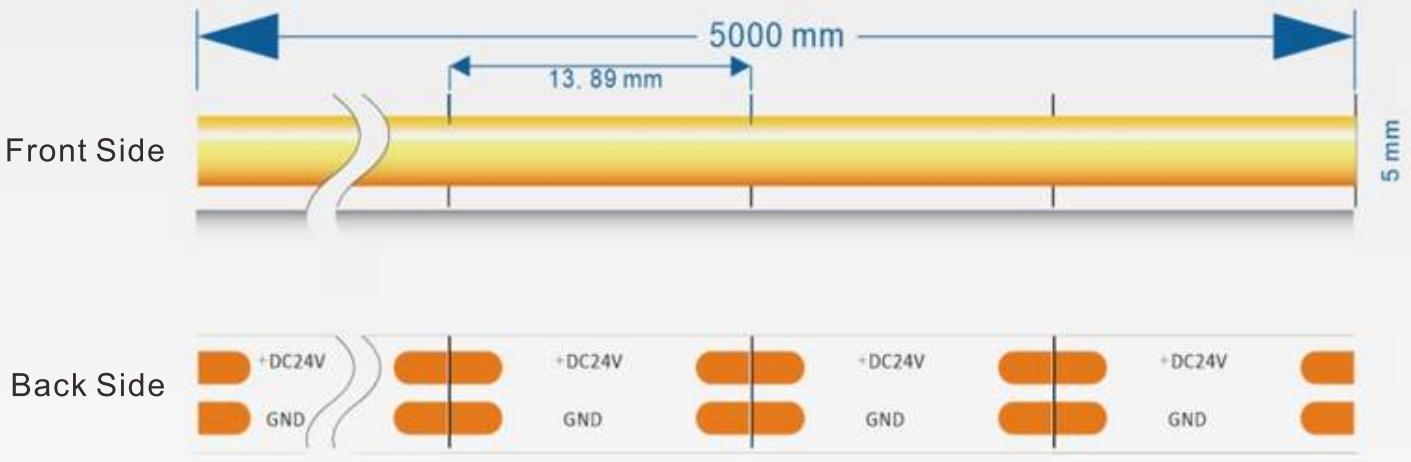

Temp.Curve:

* The above curve based on 30 minutes testing data. The Temp. changes after powering within 30 minutes.
* The x-axis indicates the minutes from 1 minutes to 30 minutes.
* The y-axis indicates the changes of temperatures in Glue, PCB under ambient TC at 25°C

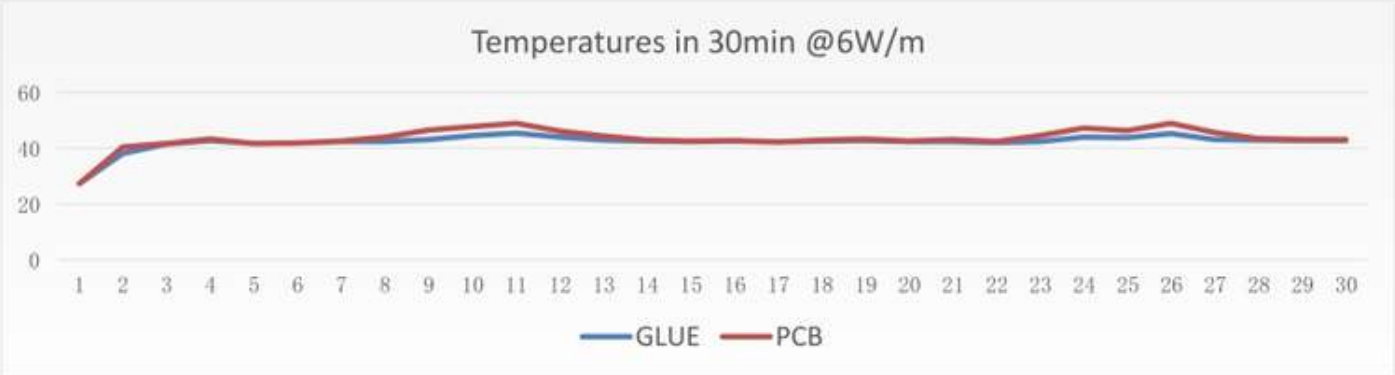

Brightness Curve:

* The above chart shows the voltage drop on each meter, shows the brightness difference on each meter.The above test are based on 5m.
* The following reference curve shows the brightness on each meter, the total length based on 5m.
* Normally, we recommend brightness drop within 30%, so the recommend connecting length is 5m.

Length	1st m	2nd m	3rd m	4th m	5th m
Volage	23.43	23	22.71	22.55	22.54
Lumen	530.36	487.61	458.77	442.86	441.86
Dropped	0.00%	-8.06%	-13.50%	-16.50%	-16.69%

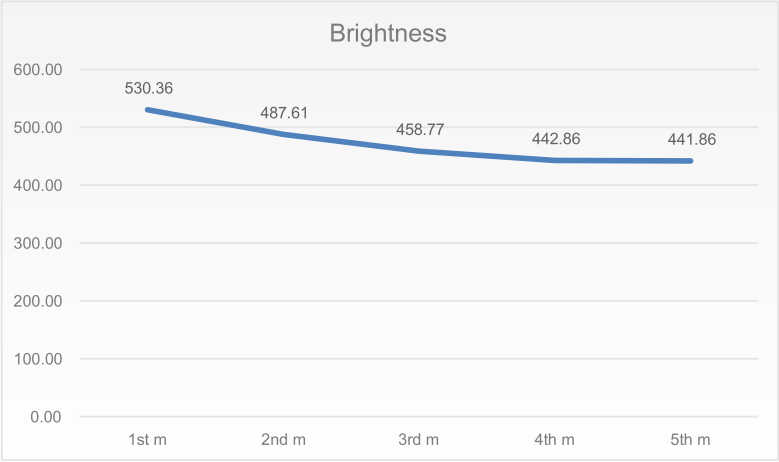

Waterproof Ways:

Waterproof Ways	IP Rating	Details
	IP 65	Injected with Silicone Tube.

Installation Way:

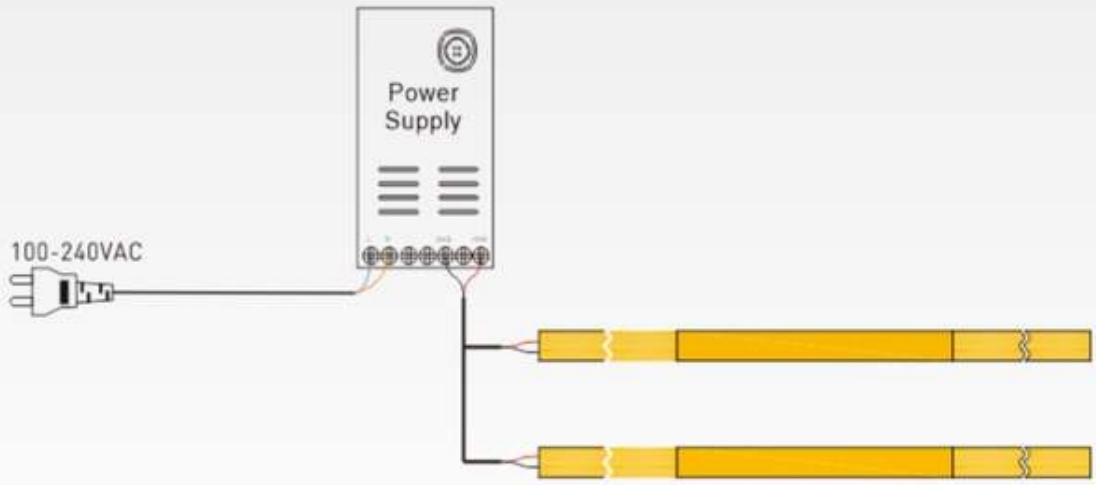

* The max running length is 5 meters, for over 5 meters please connect in parallel.
* Make sure of the total watts of COB Strip lights is less than 80% of the power supply's max output.
* Match the polarities according to the mark ('+' and '-') in the PCB while connecting.