# Installation of L Joiner kit

Risk of fire and electricity The installation must be done by electricians or professionals Turn off the power supply before operation.

## Notice

1. Read this instruction carefully before installation.
2. Installation should be in accordance with national and local electrical laws and regulations.
3. Product should installed by qualified and licensed electrician.
4. Do not install in humid places, for dry and non-humid environments only.
5. Always turn off the power supply before installation or maintenance.
6. To reduce the risk of fire and overheating, make sure all connections are tight.
7. Fixtures should not covered with thermal insulation pads or similar materials at any circumstance.
8. Do not touch the fixture if trial operation in case of danger.
9. Do not use out doors.

## Parts List

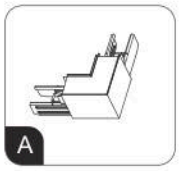


"L"joiner

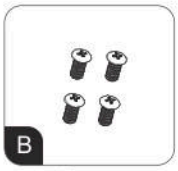


Screws

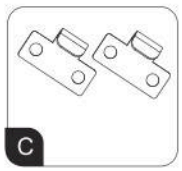


Splicing bracket B

## Installation

Cautions before Installation

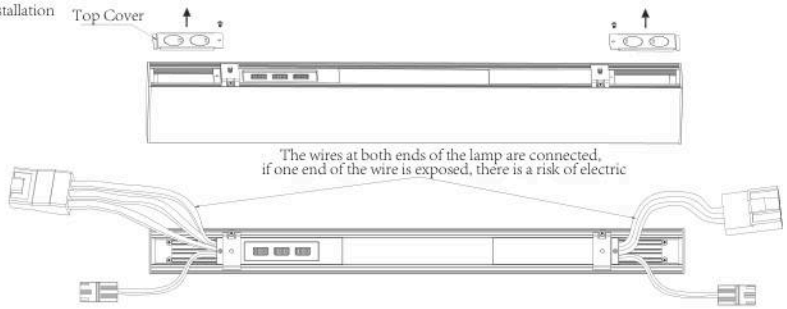


1, Open the top cover and check if the wires at both ends are securely connected to the terminals. Do not use if the wires are exposed.
2, Please turn off the power before testing the operation of the lighting fixtures, and do not touch any part of the fixtures to avoid the risk of electric shock.

Wiring Direction Indication:




When connecting to the mains power, please connect it from one end of the control board.

1. If any other shape needed, please contact the manufacturer for check. Do not install according to your needs without authorization to avoid the risk of electric shock
2. When spliced fixtures are connected as a whole, the number of fixtures connected to the mains power in a single connection cannot exceed the number of lamps listed in the table below

| Size | Wattage | 110V | 277V | 347V |
|---|---|---|---|---|
| 2FT | ≤25w | 16PCS | 40PCS | 50PCS |
| 4FT | ≤50w | 8PCS | 20PCS | 25PCS |
| 8FT | ≤80w | 6PCS | 10PCS | 12PCS |
| 8FT | ≤100w | 4PCS | 8PCS | 10PCS |

1 Remove the cover from "L"joiner.

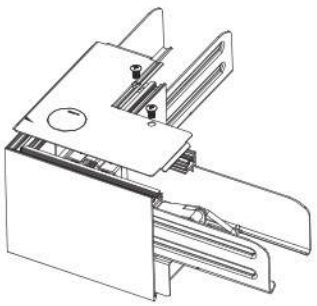

2 Remove the end cap and upper cover from fixture.

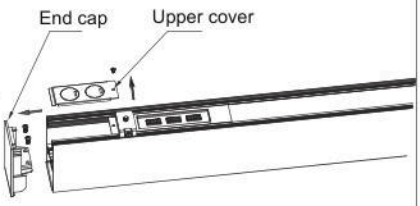


3 Slide the splicing bracket B into locating piece, then lock it with screws.

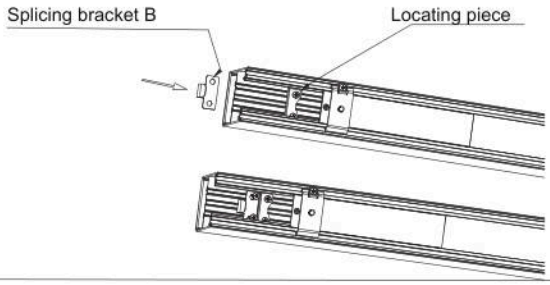

Risk of fire and electricity The installation must be done by electricians or professionals Turn off the power supply before operation.

4 Make the mounting marks on the ceiling for fixtures, pleas refer to pendant mounting instructions for suspending the fixture.

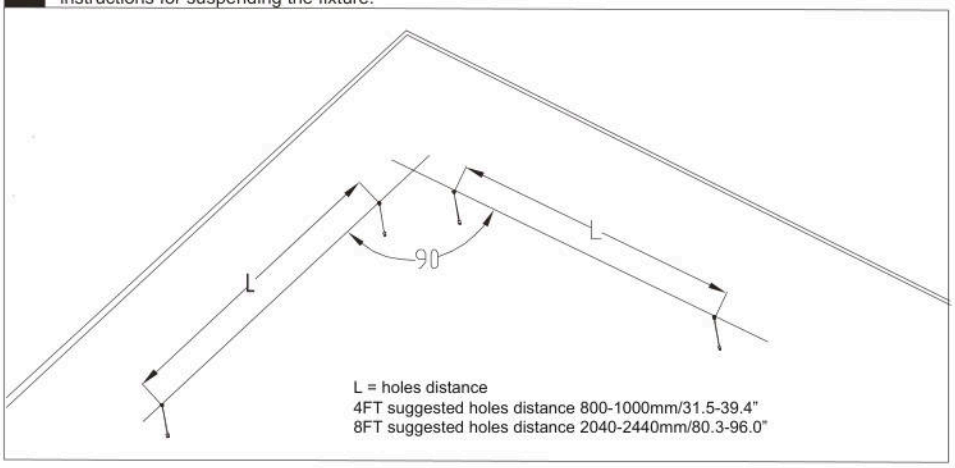


5 Insert the "L" joiner into the fixture as shown below, and pull the lock buckle to splice the fixtures.

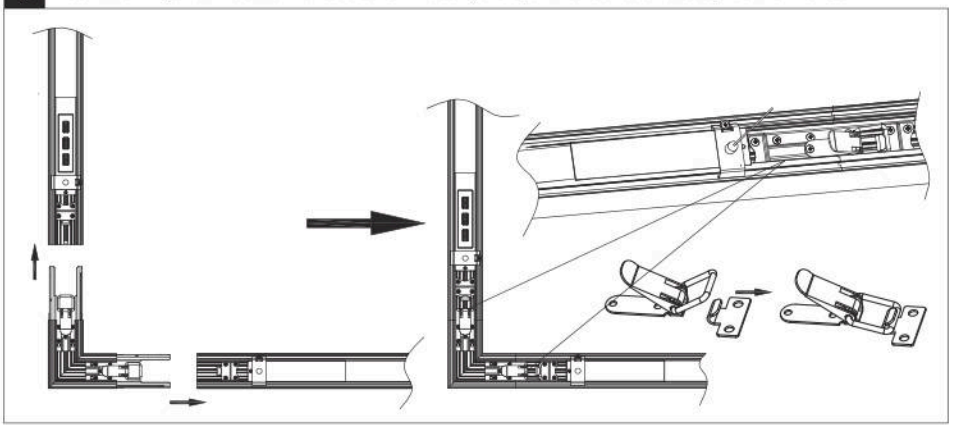

6 Make electrical connection with male-female connectors.

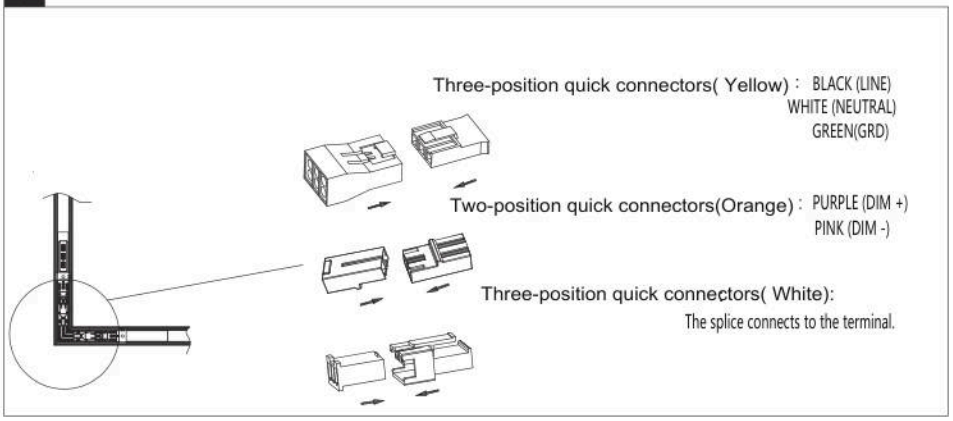


7 Cut off the connectors in one end for wiring to line voltage

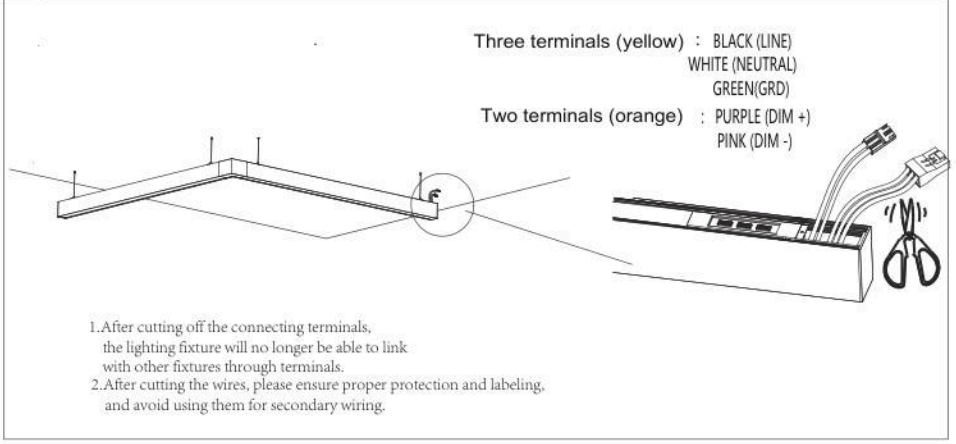

Risk of fire and electricity The installation must be done by electricians or professionals Turn off the power supply before operation.

## Wiring Diagram

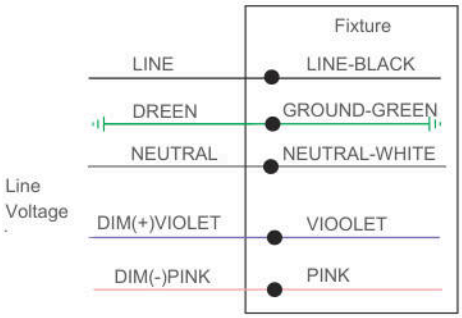


1. If dimming is not used, please separate the dimming wires with nuts.
2. Wiring must follow up the wiring diagram.
3. Remind again: Cut off the power supply before operation.

8 Screw back the cover of “L”joiner, lock back the fixture upper cover, Lock back the other end of fixture upper cover

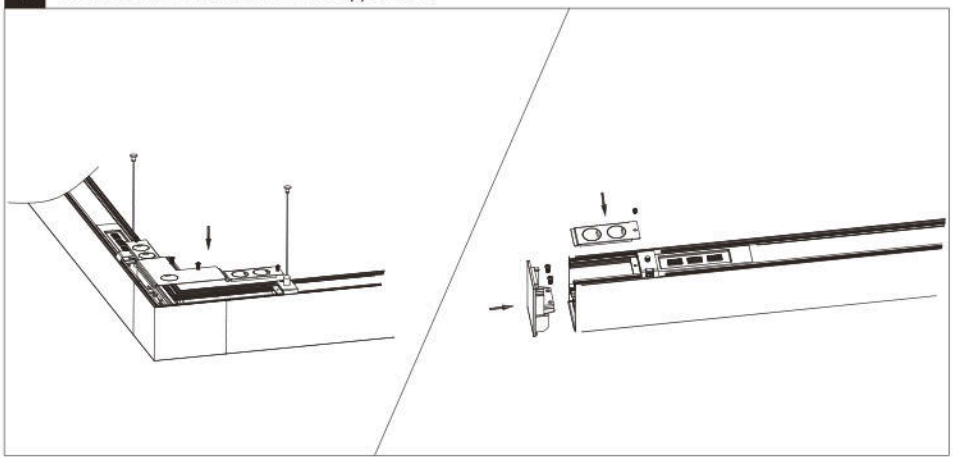

9 Make wiring according to diagram

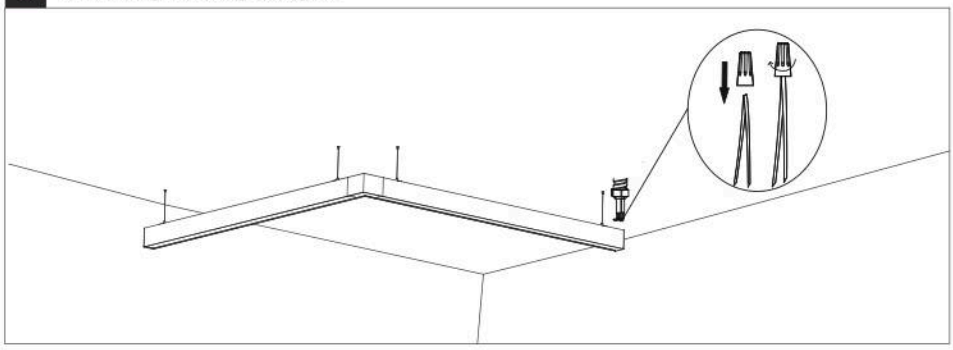

10 Installation completed.

