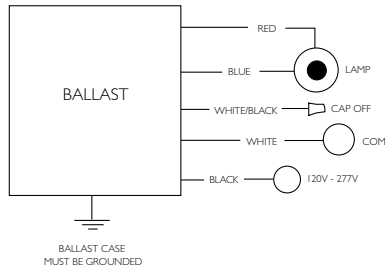


Wiring Diag. 1

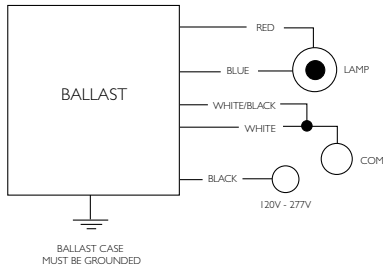


Wiring Diag. 2

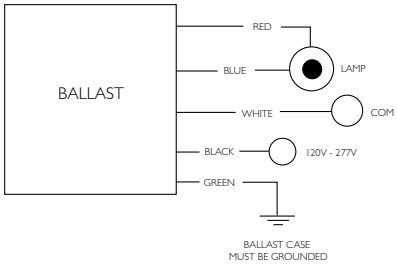


Wiring Diag. 3

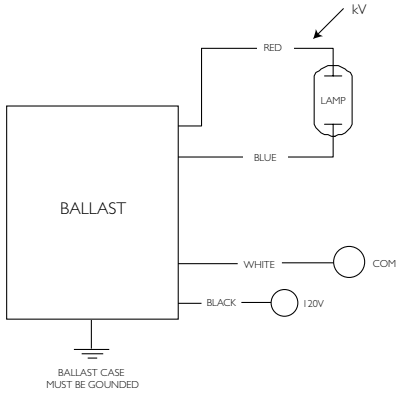


Wiring Diag. 4

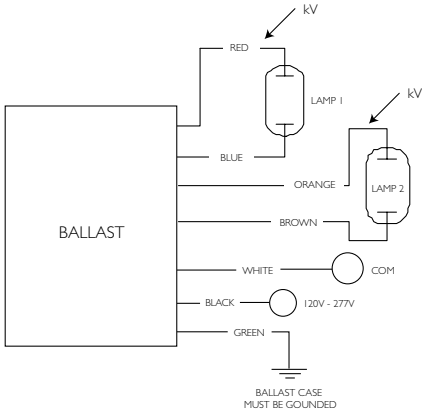


Wiring Diag. 5

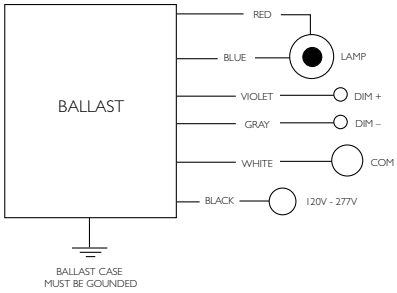


Wiring Diag. 6

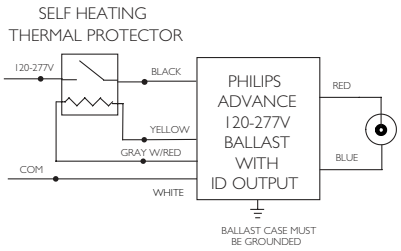


Wiring Diag. 8

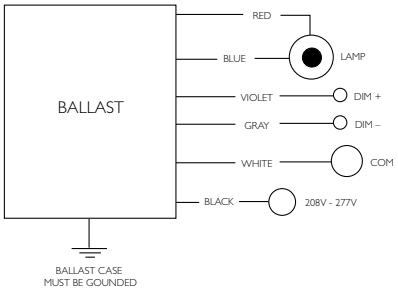


Wiring Diag. 9

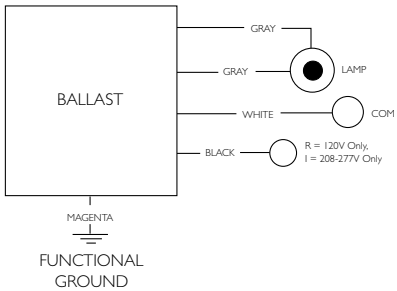


Wiring Diag. 10

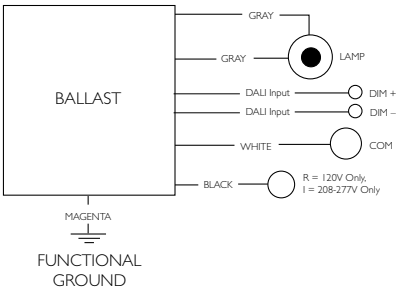


Wiring Diag. 11

# Metal Halide

| Lamp Data Number | Lamp Data Watts | Input Volts | Catalog Number* Note 1 | Certifications E | Certifications UL | Certifications CSA | Line Current (Amps) | Input Power ANSI (Watts) | Max. Case Temp. Note 5 | Wiring Diag. | Fig. | Weight (lb) | Max. Distance to Lamp (ft) |
|---|---|---|---|---|---|---|---|---|---|---|---|---|---|
| **70W Lamp, ANSI Code M98/C98 or M139/C139 or M143, Minimum Starting Temp. -20°C/-4°F** | | | | | | | | | | | | | |
| 1 | 70 | 120 | IMH-70-G-LF or IMH-70-G-BLS | | ✓ | ✓ | 0.67 | 80 | 90°C | 3 | G | 0.9 | 5 |
| | | 277 | | | ✓ | ✓ | 0.30 | 79 | | | | | |
| 1 | 70 | 120 | IMH-70-E-LF | | ✓ | ✓ | 0.67 | 80 | 90°C | 3 | E | 0.6 | 5 |
| | | 277 | | | ✓ | ✓ | 0.30 | 79 | | | | | |
| 1 | 70 | 120 | IMH-70-D-LF or IMH-70-D-BLS | | ✓ | ✓ | 0.67 | 80 | 85°C | 3 | D | 1.6 | 5 |
| | | 277 | | | ✓ | ✓ | 0.29 | 79 | | | | | |
| 1 | 70 | 120 | IMH-70-A-BLS-ID[x] | | ✓ | ✓ | 0.72 | 86 | 90°C | 8 | A | 1.6 | 6 |
| | | 277 | | | ✓ | ✓ | 0.31 | 84 | | | | | |
| **100W Lamp, ANSI Code M90/C90 or M140 or C191, Minimum Starting Temp. -20°C/-4°F** | | | | | | | | | | | | | |
| 1 | 100 | 120 | IMH-100-D-LF or IMH-100-D-BLS | | ✓ | ✓ | 0.92 | 110 | 85°C | 3 | D | 1.6 | 5 |
| | | 277 | | | ✓ | ✓ | 0.40 | 109 | | | | | |
| 1 | 100 | 120 | IMH-100-B-LF | | ✓ | ✓ | 0.92 | 110 | 85°C | 3 | A/B | 1.5 | 5 |
| | | 277 | | | ✓ | ✓ | 0.40 | 109 | | | | | |
| 1 | 100 | 120 | IMH-100-A-BLS-ID[x] | | ✓ | ✓ | 0.96 | 115 | 90°C | 8 | A | 1.4 | 6 |
| | | 277 | | | | | 0.42 | 113 | | | | | |
| **150W Lamp, ANSI Code M102/C102 or M142/C142, Minimum Starting Temp. -20°C/-4°F** | | | | | | | | | | | | | |
| 1 | 150 | 120 | IMH-150-H-LF or IMH-150-H-BLS Note 6 | ✓ | ✓ | ✓ | 1.4 | 165 | 85°C | 3 | H | 1.9 | 5 |
| | | 277 | | ✓ | ✓ | ✓ | 0.6 | 161 | | | | | |
| 1 | 150 | 120 | IMH-175-C-LF or IMH-175-C-BLS Note 3,6 | ✓ | ✓ | ✓ | 1.4 | 169 | 85°C | 1 | C | 2.5 | 5 |
| | | 277 | | ✓ | ✓ | ✓ | 0.6 | 166 | | | | | |
| **175W Pulse Start Lamp, ANSI Code M137 or M152 (Pulse Start), Minimum Starting Temp. -20°C/-4°F** | | | | | | | | | | | | | |
| 1 | 175 | 120 | IMH-175-C-LF or IMH-175-C-BLS Note 3,6 | ✓ | ✓ | ✓ | 1.7 | 194 | 85°C | 2 | C | 2.5 | 5 |
| | | 277 | | ✓ | ✓ | ✓ | 0.7 | 191 | | | | | |

## Controllable Ballasts with 0-10V Dimming Interface

| Lamp Data Number | Lamp Data Watts | Input Volts | Catalog Number* Note 1 | Certifications E | Certifications UL | Certifications CSA | Line Current (Amps) | Input Power ANSI (Watts) | Max. Case Temp. Note 5 | Wiring Diag. | Fig. | Weight (lb) | Max. Distance to Lamp (ft) |
|---|---|---|---|---|---|---|---|---|---|---|---|---|---|
| **150W Lamp, ANSI Code M102/C102 or M142/C142, Minimum Starting Temp. -20°C/-4°F** | | | | | | | | | | | | | |
| 1 | 150 | 120 | IZTMH-150C-LF Note 6 | ✓ | ✓ | ✓ | 1.4 | 169 | 85°C | 6 | C | 2.5 | 5 |
| | | 277 | | ✓ | ✓ | ✓ | 0.6 | 166 | | | | | |

1. All ballasts are sound rated A, and feature high power factor (>0.9, a ballast factor of 1.0 resettable thermal protection, and a maximum Harmonic Distortion of 15%.
2. For IMH-39-K-LF, RMH-39-K-LF, RMH-20-K-LF and IMH-G20-KLF input and output lead wires exit on opposite sides of ballast. For IMH-39-K-LFS, RMH-39-K-LFS, RMH-20-K-LFS and IMH-G20-KLFS all lead wires exit the same side of the ballast.
3. A dual-wattage ballast for 150W or 175W MH
4. Maximum case temperature should not be exceeded in the application, as life will be affected and the integral re-settable thermal protector may activate. A lower maximum temperature rating does not imply lesser thermal performance, and can be indicative of a cooler running ballast design. Consult factory for further application assistance.
5. Also operates the ES16 and ES36 SLi Brightspot lamps
6. "Circle E" denotes EISA compliance

* Ordering information:
—LF Side exit leads with mounting feet
—BLS Bottom exit leads with mounting studs

x Use with any Self Heating Thermal Protector (Insulation Detector) having equivalent resistive value 5k to 25k ohm (4 wire versions only)

*Refer to pages 4-8 for ballast dimensions*
*Refer to pages 4-3 for lead wire information*

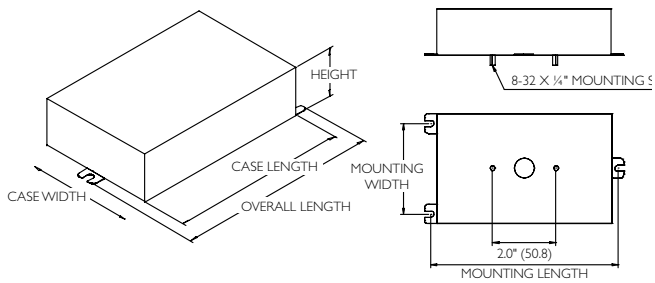


| Figure | Overall Length | Length | Width | Height | Mounting Length | Mounting Width |
|---|---|---|---|---|---|---|
| A/B | 140mm [5.5"] | 120mm [4.7"] | 92mm [3.6"] | 38mm [1.5"] | 132mm [5.2"] | 73mm [2.9"] |
| C | 204mm [8.0"] | 184mm [7.2"] | 92mm [3.6"] | 38mm [1.5"] | 195mm [7.7"] | 73mm [2.9"] |
| H | 161mm [6.3"] | 144mm [5.7"] | 92mm [3.6"] | 38mm [1.5"] | 152mm [6.0"] | 73mm [2.9"] |

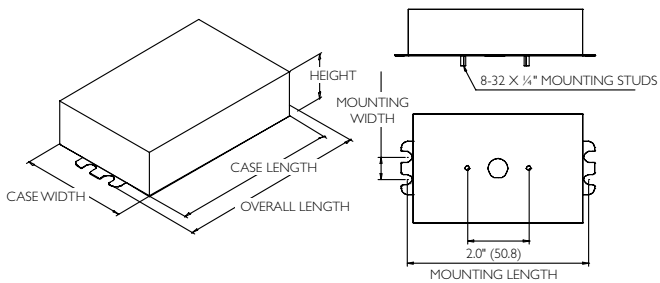


| Figure | Overall Length | Length | Width | Height | Mounting Length | Mounting Width |
|---|---|---|---|---|---|---|
| D | 128mm [5.0"] | 108mm [4.3"] | 77mm [3.0"] | 38mm [1.5"] | 118mm [4.6"] | 19mm [0.7"] |

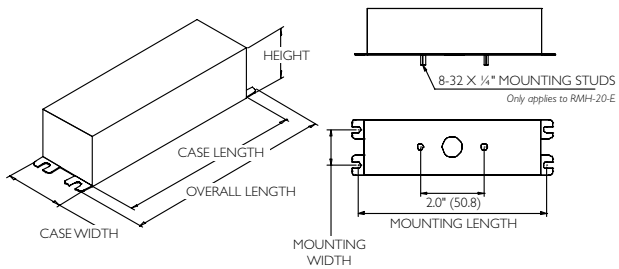


| Figure | Overall Length | Length | Width | Height | Mounting Length | Mounting Width |
|---|---|---|---|---|---|---|
| E | 140mm [5.5"] | 127mm [5.0"] | 44mm [1.7"] | 30mm [1.2"] | 135mm [5.3"] | 26mm [1.0"] |

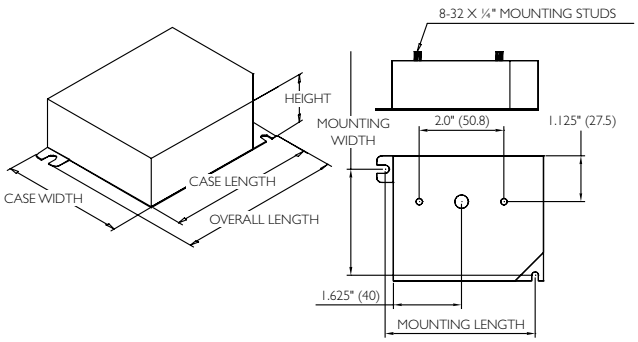


| Figure | Overall Length | Length | Width | Height | Mounting Length | Mounting Width |
|---|---|---|---|---|---|---|
| G | 97mm [3.8"] | 90mm [3.5"] | 77mm [3.0"] | 30mm [1.2"] | 87mm [3.4"] | 67mm [2.6"] |

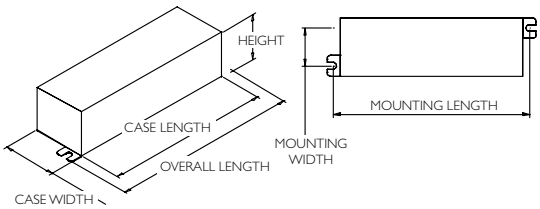


| Figure | Overall Length | Length | Width | Height | Mounting Length | Mounting Width |
|---|---|---|---|---|---|---|
| K | 119mm [4.4"] | 104mm [4.1"] | 33mm [1.1"] | 30mm [1.2"] | 114mm [4.5"] | 13.5mm [0.5"] |